DUAL DOZER
Laser Controlled

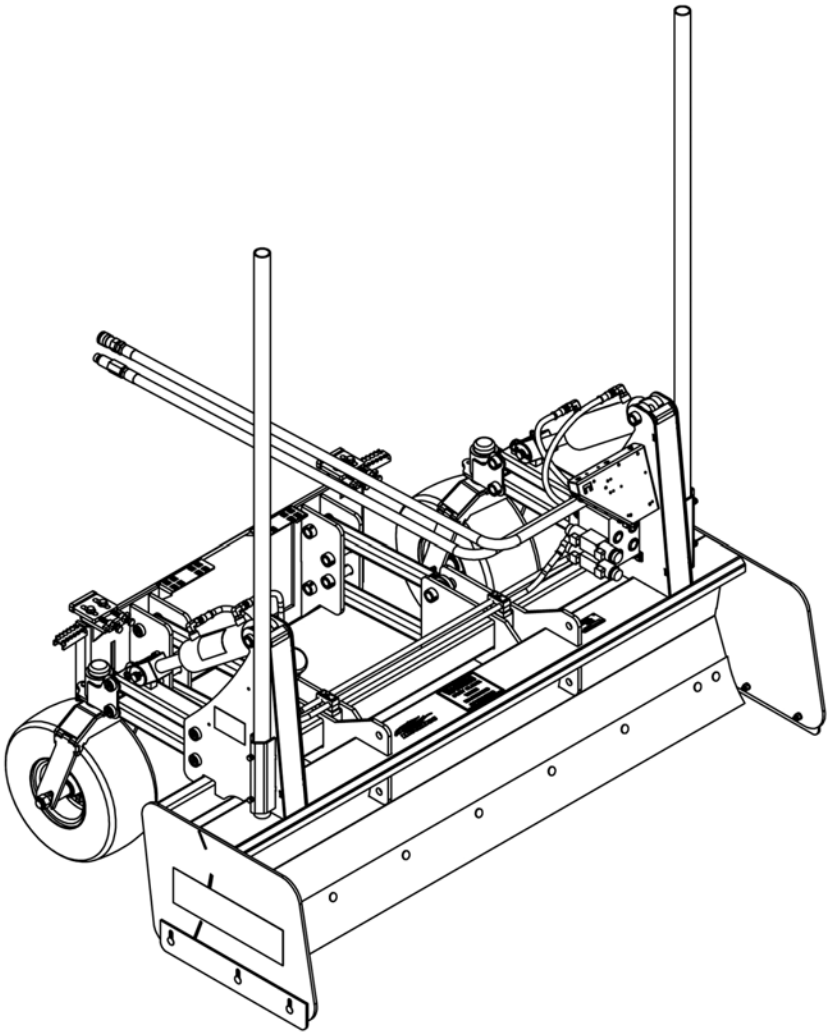

Dual Dozer

Owner's Manual

Model 6 FT • 7 FT • 8 FT

Model Number: _____

Serial Number: _____

Date of Purchase: _____

THIS SAFETY ALERT SYMBOL INDICATES IMPORTANT SAFETY MESSAGES IN THIS MANUAL. WHEN YOU SEE THIS SYMBOL, CAREFULLY READ THE MESSAGE THAT FOLLOWS AND BE ALERT TO THE POSSIBLITY OF DEATH OR SERIOUS INJURY.

If Safety Decals on this use the words **Danger, Warning or Caution,**
which are defined as follows:

- **DANGER:** Indicates an immediate hazardous situation that, if not avoided, will result in death or serious injury. The color is associated with Danger is RED.
- **WARNING:** Indicates a potentially hazardous situation that, if not avoided, could result in death or serious injury. The color associated with Warning is ORANGE.
- **CAUTION:** Indicates a potentially hazardous situation that, if not avoided, may result in minor or moderate injury. It may also be used to alert against unsafe practices. The color associated with Caution is YELLOW.

If Safety Decals on this machine are ISO two panel Pictorial; decals are defined as follows:

- The first panel indicates the nature of the hazard.
- The second panel indicates the appropriate avoidance of the hazard.
- Background color is YELLOW.
- Prohibition symbols such as and STOP if used, are RED.

WARNING

IMPROPER OPERATION OF THIS MACHINE CAN CAUSE DEATH OR SERIOUS INJURY. BEFORE USING THIS MACHINE, MAKE CERTAIN THAT EVERY OPERATOR:

- Is instructed in safe and proper use of the machine.
- Reads and understands the Manual(s) pertaining to the machine.
- Reads and understands ALL Safety Decals on the machine.
- Clears the area of other persons.
- Learns and practices safe use of machine controls in a safe, clear area before operating this machine on a job site.

It is your responsibility to observe pertinent laws and regulations and follow HitchDoc Manufacturing instructions on machine operation and maintenance.

Table of Contents

Introduction

Owner Information 5
Serial Number Location 5
Dual Dozer Identification 6
Features And Accessories 7
Standard Items 7
Options 7

Safety

Safety Information 11
Owner's Responsibility 11
Operating Safety 12
Decal Replacement 13

Inspection And Setup

Inspection 17
Dual Dozer Mounting Frame 17
Setup 17
Receiver Mast Installation 17
Laser Receiver Installation 18
Controller Installation 18
Installation With Ski-Steer Loader 19
Installing The Dual Dozer 19
Roll-Back Stop Adjustment 20
Skid Plate Adjustment 20
Hydraulic Quick Coupler Installation 21
Electrical Harness Installation 21
Installation With Tractor 22
Installing The Dual Dozer 22
Skid Plate Adjustment 22
Hydraulic Quick Coupler Installation 23
Electrical Harness Installation 23

Operation

Dual Dozer Operation 27
Operating The Dual Dozer (Without Laser) 27
Operating The Dual Dozer (With Laser) 27
General Construction (Flat Grade) 28
Job Site Recommendations 29

Maintenance

Maintenance Safety 33
General Maintenance. 33
Maintenance Items. 34
Lubricating The Dual Dozer 34
Removal And Installation 35
Blade Removal 35
Skid Plate Removal 35
Storage And Return To Service 36
Storage 36
Return to Service 36

Specifications

Dimensions 39
Dual Dozer 39
Torque Chart 40
Hydraulic Fitting Torque Data. 40
English Bolt Torque Data 41
Metric Bolt Data 43

Parts Identification

Parts (Dual Dozer Earlier Models) 46
Parts (Dual Dozer Later Models) 48
Parts (Wheel Assembly) 50
Parts (Quicktach) 52
Parts (3 Point Hitch). 53

Warranty

Warranty Policy 57

INTRODUCTION

Owner Information

Thank you for your decision to purchase a Dual Dozer from HitchDoc. To ensure maximum performance of your Dual Dozer, it is mandatory that you thoroughly study the owner's manual and follow its recommendations. Proper operation and maintenance are essential to prevent injury or damage and to maximize machine life.

Operate and maintain this machine in a safe manner and in accordance with all applicable local, state, and federal codes, regulations and/or laws.

Make sure that all personnel have read this owner's manual and thoroughly understand safe and correct operating, installation and maintenance procedures.

Continuous improvement and advancement of HitchDoc products may result in changes to your equipment that may not be reflected in this publication. HitchDoc reserves the right to make product improvements to the machine at any time. Although great care has been taken to ensure the accuracy of this publication, HitchDoc Manufacturing Inc. does not assume any liability for errors or omissions.

Serial Number Location

Figure 1

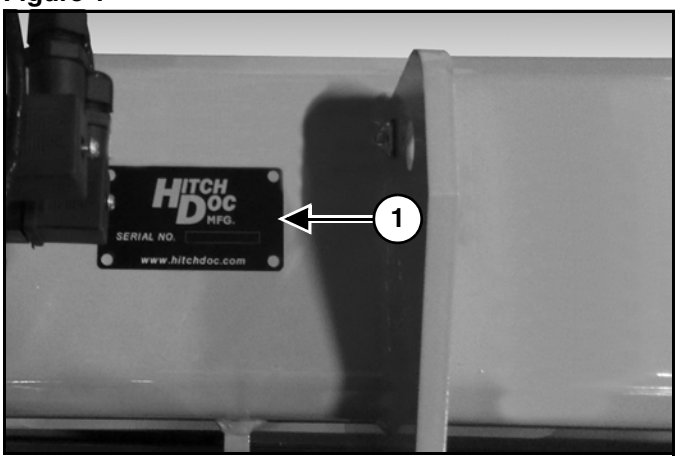

The Dual Dozer serial number plate (Item 1) **[Figure 1]** is located on the frame.

Always use the serial number of the Dual Dozer when requesting service information or when ordering parts. Early or later models (identification made by serial number) may use different parts, or may require a different procedure in doing a specific service operation.

Dual Dozer Identification

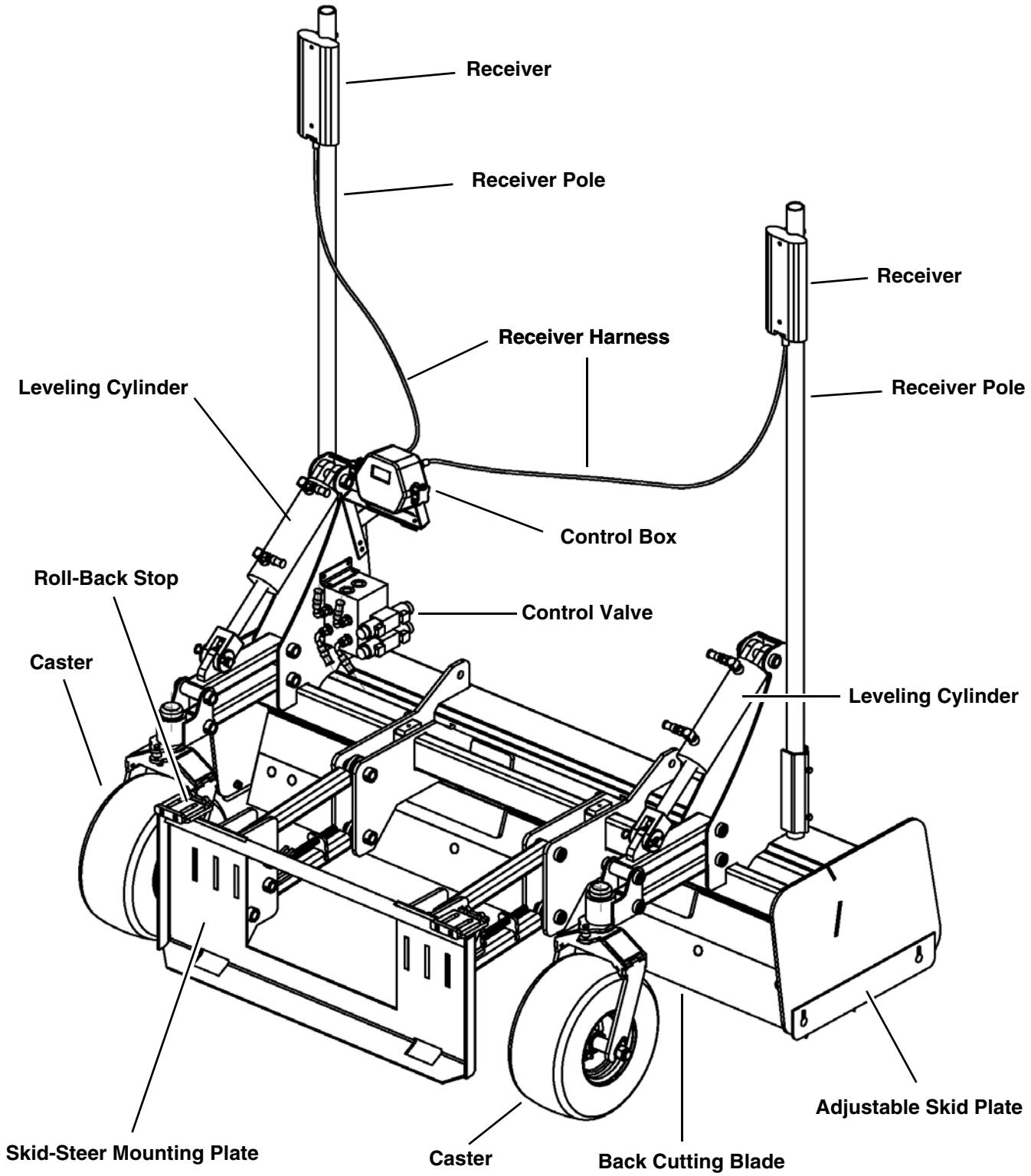

Features And Accessories

Standard Items

- Replaceable Cutting Edge
- 40 GPM Hydraulic Block
- Greaseable Pivot Points
- Durable Powder Coat Paint

Options

- Skid Steer Quick - Tach or CAT I & II - 3 Point Hitch
- Three Control Packages
  - Trimble® GCS900
  - Topcon System Five
  - Leica Icon

SAFETY

Safety Information

This section covers recommended safety instructions, along with other general recommendations and specific machine safety precautions that should be read thoroughly before operating the machine.

⚠ Safety Alert Symbol

This message alert symbol identifies important safety messages on the equipment and in the owner's manual. When you see this symbol, be alert to the possibility of personal injury and carefully read the message that follows.

In this owner's manual and on decals used on the equipment the words **DANGER, WARNING, CAUTION, IMPORTANT, and NOTE** are used to indicate the following:

DANGER: This word warns of immediate hazards which, if not avoided, will result in severe personal injury or death.

WARNING: This word refers to a potentially hazardous situation which, if not avoided, could result in severe personal injury or death.

CAUTION: This word refers to a potential hazard or unsafe practice which may result in minor or moderate personal injury.

IMPORTANT: Highlights information that must be heeded.

NOTE: A reminder of other related information that needs to be considered.

Be certain all equipment operators are aware of the dangers indicated by safety decals applied to the equipment, and be certain they follow all safety decal instructions. Contact your authorized Distributor, Dealer Parts Department or HitchDoc for safety decal replacement.

Do not modify the Dual Dozer in any way. Unauthorized modification may impair the function and/or safety of the components and systems and could affect the life of the equipment, possibly invalidating the warranty coverage.

HitchDoc cannot anticipate every possible circumstance that may involve a potential hazard. The warnings in this owner's manual are not all inclusive.

Owner's Responsibility

Operate and maintain the Dual Dozer in a safe manner and in accordance with all applicable local, state, and federal codes, regulations and/or laws.

Make sure that all personnel have read this owner's manual, and thoroughly understand safe and correct installation, operation and maintenance procedures.

Give operating instructions to the operators before allowing them to operate the machine.

Fulfill all warranty obligations so as not to void the warranties. The warranty policy located on page 57 outlines the warranty policy of HitchDoc Manufacturing Inc.

- Do not allow anyone to operate the machine until he or she has read the owner's manual and is completely familiar with all safety precautions.
- Do not allow inexperienced persons unfamiliar with the machine, or unfamiliar with safe operating and maintenance procedures for the equipment to operate or maintain the machine.
- Do not allow persons under the influence of alcohol, medications, or other drugs that can impair judgement to operate or maintain the machine.
- Wear safety glasses, gloves, hearing protection and other protective clothing when required.
- Before you service the Dual Dozer, remove the key from the machine and place a Do Not Operate tag on the machine or remove the Dual Dozer from the machine.
- Do not replace components or parts with other than factory-recommended service parts. To do so may decrease the effectiveness and/or the safety of the machine.
- Do not modify the Dual Dozer in any way. Un-authorized modification can result in serious injury or death and may impair the function and life of the Dual Dozer.
- Never operate the machine in an enclosed area. Proper ventilation is required under all circumstances.
- Have a first-aid kit available for use should the need arise and train personnel on proper use of the kit.
- Review safety related items annually with all personnel who will be operating, using or maintaining the Dual Dozer.

Operating Safety

⚠ WARNING

AVOID INJURY OR DEATH

Warnings on the machine and in the manuals are for your safety. Failure to obey warnings can cause serious injury or death.

⚠ WARNING

These are general safety considerations. Additional precautions may be necessary to operate your equipment in a safe manner. Be certain you are operating your equipment in accordance with all safety codes, OSHA rules and regulations, insurance requirements; and local, state and federal laws.

⚠ WARNING

LASER RADIATION

Avoid direct eye exposure. CLASS 3A / 3R Laser Product.

Failure to comply with the following messages could result in death or serious injury.

- Use of laser products by people other than those trained on laser products may result in exposure to hazardous laser light.
- NEVER look into the laser beam or direct it to the eyes of other people.
- Always operate the laser unit in a way that prevents the beam from getting into people's eyes.
- Use care when climbing on frame to prevent slipping or falling.
- Install and secure all guards before operating.
- Be aware of all pinch points on the machine and keep clear.
- Do not wear loose hanging clothing. These precautions will help prevent you from becoming caught in the moving parts or on levers and latches on the machine.
- Watch for adequate overhead clearance when operating the machine.
- Stay away from overhead power lines. Electrocution can occur without direct contact.
- Escaping hydraulic fluid under pressure can have sufficient force to penetrate skin, causing serious injury. NEVER check for leaks by using any part of your body to feel for escaping fluid.
- Periodically check all hose connections, pressures and temperatures. Replace or repair anything that could cause a potential hazard.
- Before servicing, make sure the machine has cooled down. Machine components, hoses and fittings can get hot enough to cause serious injury.

Decal Replacement

- Keep all safety signs and reflectors clean and legible at all times.
- Replace safety signs and reflectors that are missing or have become illegible.
- Replaced parts that displayed a safety sign, must also display the current sign.
- Contact your authorized Distributor, Dealer Parts Department or HitchDoc for safety decal replacement.

INSPECTION AND SETUP

Inspection

Dual Dozer Mounting Frame

Figure 2

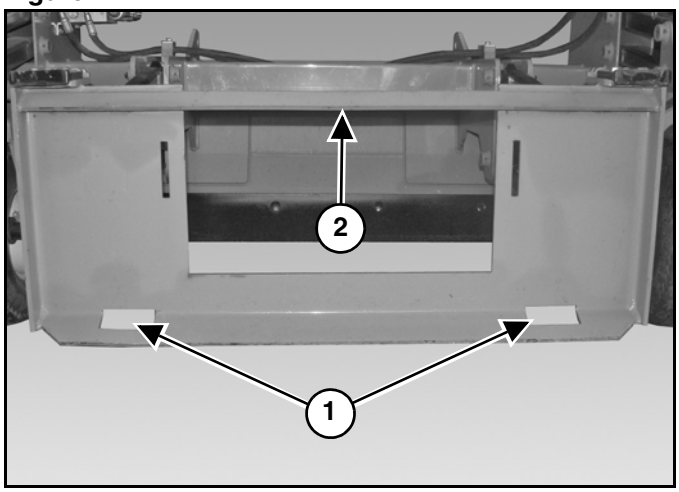

Inspect the Dual Dozer mounts (Item 1), mounting flange (Item 2) **[Figure 2]** and all welds on the Dual Dozer mounting frame for wear or damage each time the Dual Dozer is removed from the machine.

Setup

Receiver Mast Installation

Figure 3

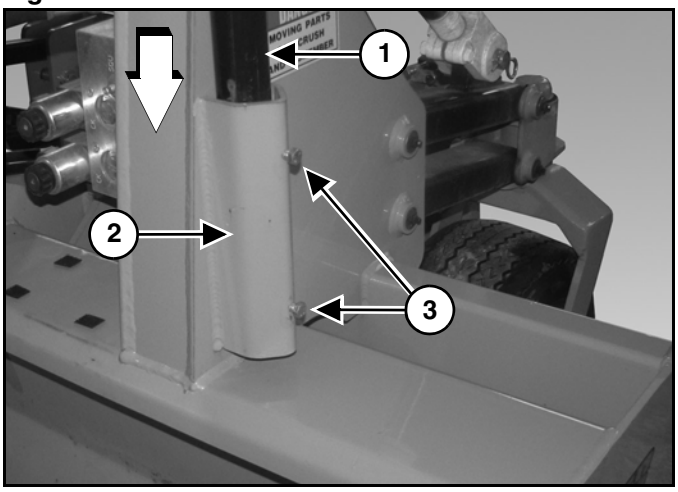

Install the receiver mast (Item 1) into the mount (Item 2) **[Figure 3]**.

Hold the receiver mast flush with the bottom of the mount.

Tighten the two bolts (Item 3) **[Figure 3]** securely against the receiver mast to prevent movement during operation.

Repeat procedure on opposite side of dual dozer.

Setup (Cont'd)

Laser Receiver Installation

Note: The laser receiver installation in this section is general information. See the Laser Receiver User Guide for additional installation and adjustment information.

Figure 4

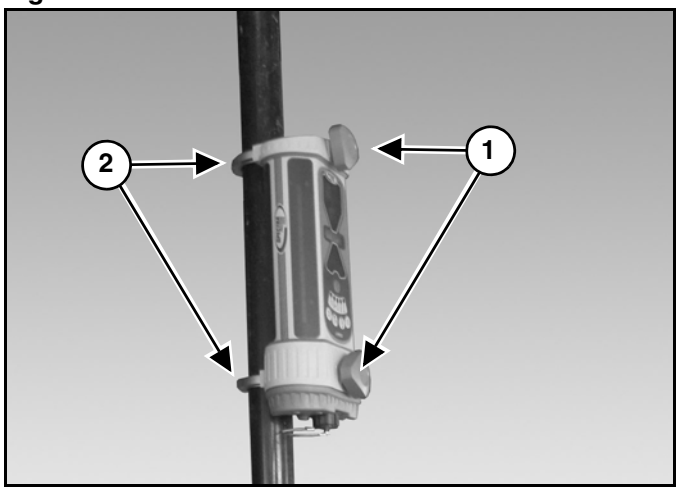

Loosen the knobs (Item 1) until the mounting hooks (Item 2) **[Figure 4]** are open far enough to install over the receiver mast. Install the laser receiver onto the receiver mast and tighten the knobs securely fastening the laser receiver to the receiver mast.

Repeat procedure on opposite side of dual dozer.

Figure 5

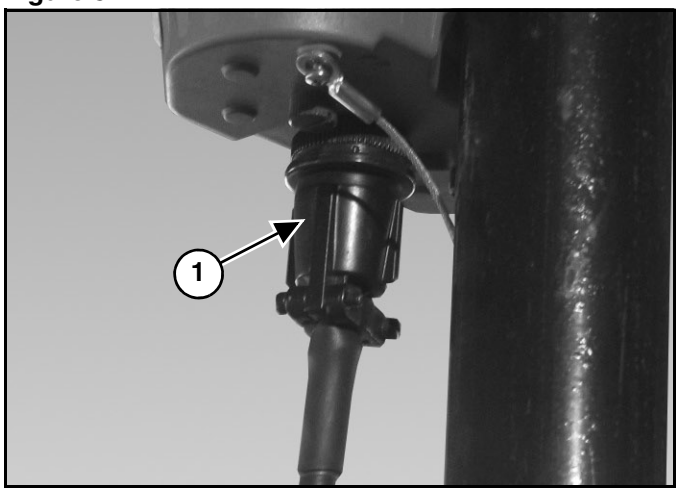

Connect the laser receiver harness (Item 1) **[Figure 5]** to the laser receiver. Connect the other end of the harness to the receiver junction box.

Repeat procedure on opposite side.

Controller Installation

Note: The controller installation in this section is general information. See the Controller User Guide for additional installation and adjustment information.

Figure 6

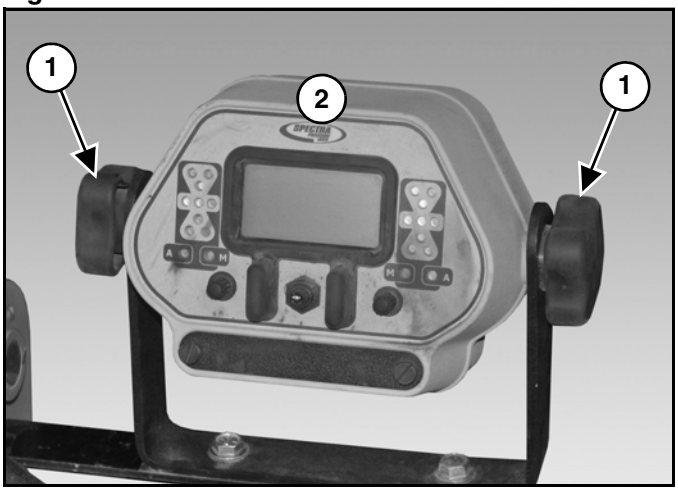

Loosen the knobs (Item 1) and install the controller (Item 2) **[Figure 6]** into the mount on the dual dozer.

Note: Install the controller with the control panel facing the operator.

Tighten the knobs (Item 1) **[Figure 6]** securely against the mount.

Note: Some models may have the controller installed in the cab using ram mounts.

Connect the remaining harnesses to the back of the controller. The connectors are keyed so that there is only one way to connect each harness.

Installation With Ski-Steer Loader

Installing The Dual Dozer

Note: Refer to your machine's Operation Manual for information on properly operating and installing attachments to your machine.

Note: Verify your machine's load capacity and that your machine is capable of operating the dual dozer.

⚠ WARNING

AVOID INJURY OR DEATH

Always shut off the machine's engine and apply the parking brake before exiting the machine.

Figure 7

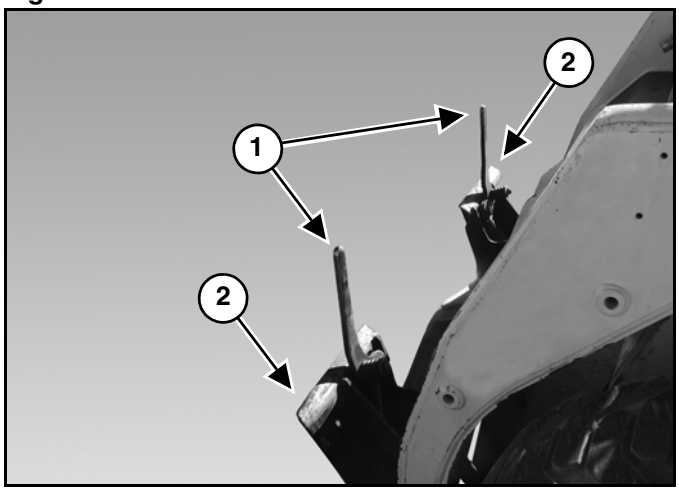

Confirm the wedge mount pins (Item 1) **[Figure 7]** are up until the levers are fully raised.

Note: Wedge mounts pins may be manual or hydraulic. See your machine's Operation Manual for wedge mounts pin operation.

Enter the machine, fasten seat belt, start engine and release the parking brake.

Lower the machine's lift arms and tilt the machine's mounting frame (Item 2) **[Figure 7]** slightly forward.

Figure 8

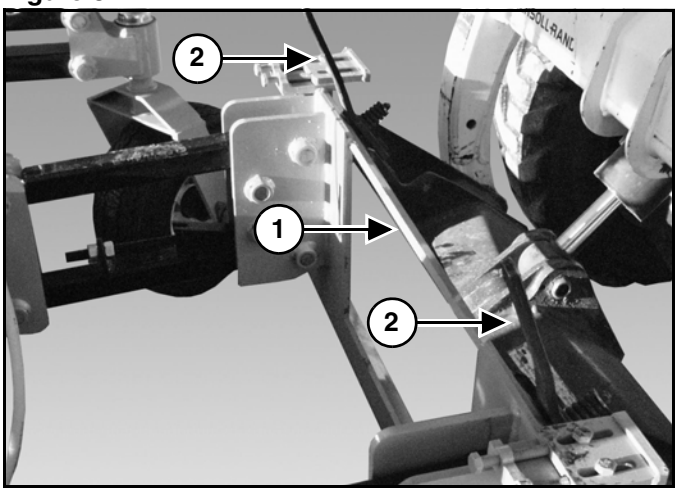

Drive the machine forward until the top edge of the machine's mounting frame is under the dual dozer mounting flange (Item 1) **[Figure 8]**. Raise and tilt the machine's mounting frame back until the dual dozer mounting frame contacts the machine's mounting frame.

Engage parking brake, shut engine off, remove seat belt and exit the machine.

Push the wedge mount levers (Item 2) **[Figure 8]** down until the levers are fully engaged in the locked position.

⚠ WARNING

AVOID INJURY OR DEATH

Wedge mount pins MUST extend through the holes in the attachment. Wedge mount pins MUST be fully down in the locked over-center position. Failure to secure wedge mount pins can allow attachment to come off.

Installation With Ski-Steer Loader (Cont'd)

Roll-Back Stop Adjustment

Figure 9

Position the dual dozer and machine on level area that is on grade **[Figure 9]**.

Lower the cutting blade(s) on grade.

Engage parking brake, shut engine off, remove seat belt and exit the machine.

Note: Make sure the dozer blade is level before adjusting roll back stops.

Figure 10

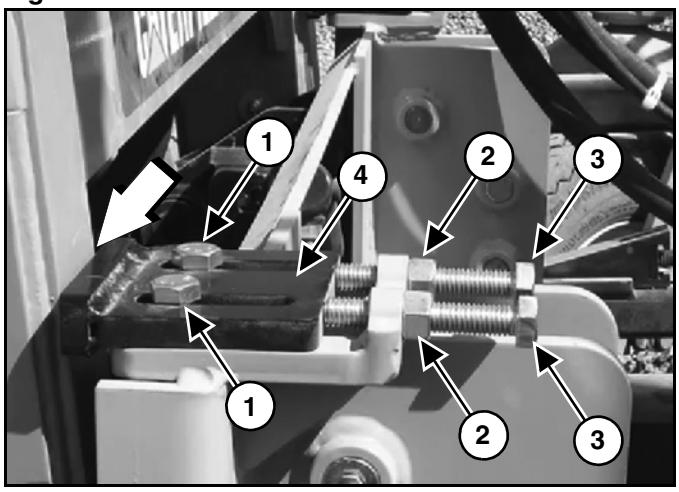

Loosen the two bolts (Item 1), then loosen the two jam nuts (Item 2) **[Figure 10]**.

Tighten the two adjustment bolts (Item 3) evenly until the roll-back stop (Item 4) **[Figure 10]** is against the lift arm of the machine.

Repeat procedure on remaining roll-back stop.

Skid Plate Adjustment

Figure 11

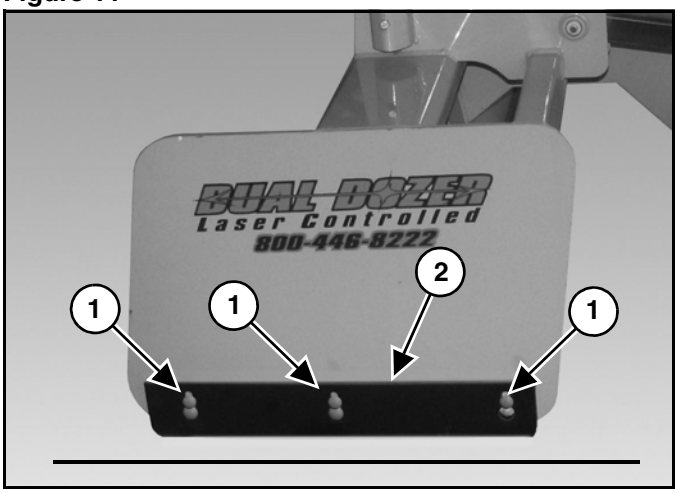

Position the dual dozer and machine on level area that is on grade **[Figure 9]**.

Loosen the bolts (Item 1), raise or lower the skid plate (Item 2) **[Figure 11]** until parallel with the ground.

Installation With Ski-Steer Loader (Cont'd)

Hydraulic Quick Coupler Installation

⚠ WARNING

AVOID BURNS

Hydraulic fluid, fluid tubes, fittings and quick couplers can get hot when running the machine and attachments Be careful when connecting and disconnecting quick couplers.

IMPORTANT

- **Thoroughly clean the quick coupler before making connections. Dirt can damage the system.**
- **Contain and dispose of any oil leakage. See local, state and federal regulations for the correct disposal.**

⚠ WARNING

AVOID INJURY OR DEATH

Hydraulic fluid under pressure can penetrate skin or eyes, causing serious injury or death. Fluid leaks under pressure may not be visible. Wear safety glasses and use a piece of cardboard to find leaks. Do not use your hands. if fluid enters the skin or eyes, get immediate medical attention from a physician familiar with this injury.

Note: Refer to your machine's Operation Manual for proper hydraulic quick coupler installation on your machine.

Figure 12

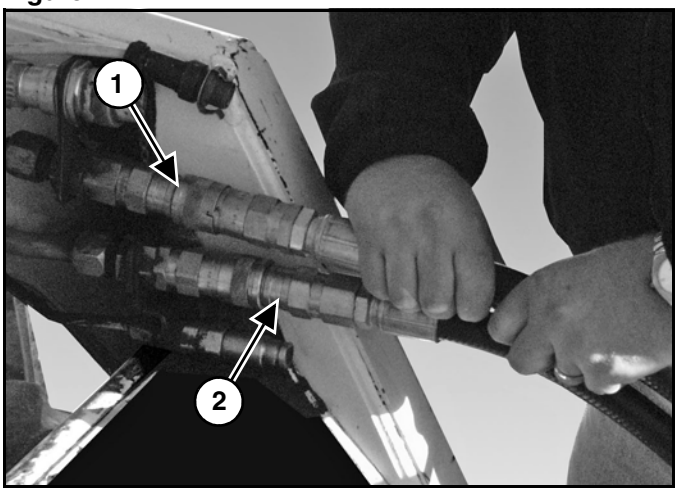

Connect the dual dozer hydraulic hose equipped with the female quick coupler (Item 1) **[Figure 12]** to the machine.

Connect the dual dozer hydraulic hose equipped with the male quick coupler (Item 2) **[Figure 12]** to the machine.

Note: Make sure the quick couplers are fully engaged. If the quick couplers do not fully engage, check to see that the couplers are the same size and type.

Electrical Harness Installation

Figure 13

Connect the dual dozer electrical harness (Item 1) **[Figure 13]** to the harness connected to the machine's battery compartment.

Installation With Tractor

Installing The Dual Dozer

Note: Refer to your machine's Operation Manual for information on properly operating and installing attachments to your machine.

Note: Verify your machine's load capacity and that your machine is capable of operating the dual dozer.

⚠ WARNING

AVOID INJURY OR DEATH

Always shut off the machine's engine and apply the parking brake before exiting the machine.

Enter the machine, fasten seat belt, start the engine and release the parking brake.

Move the tractor backwards towards the dual dozer and align with the dual dozer mounts.

Figure 14

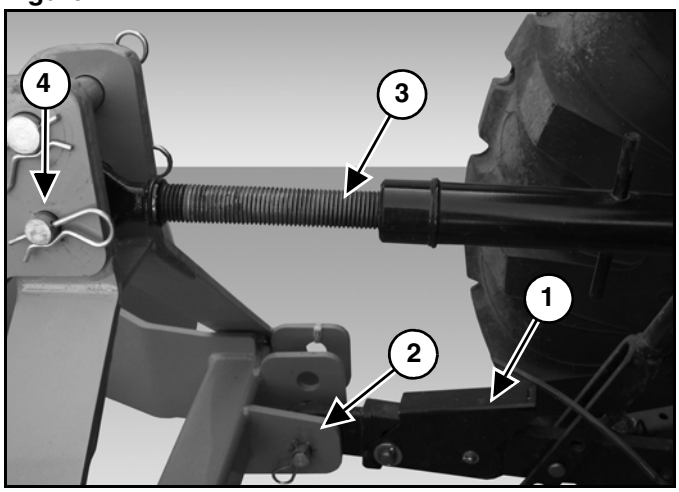

Move the tractor backwards until the two lower lift arms (Item 1) are aligned with the dual dozer mounts. Install pin and retaining clip (Item 2) **[Figure 14]** (both sides).

Lengthen or shorten the top link (Item 3) to align with the top mount of the dual dozer. Install pin and retaining clip (Item 4) **[Figure 14]**.

Skid Plate Adjustment

Figure 15

Position the dual dozer and machine on level area that is on grade **[Figure 15]**.

Figure 16

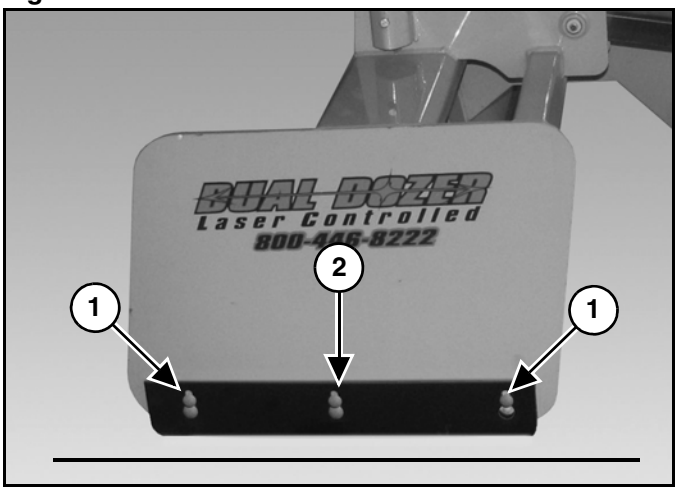

Loosen the bolts (Item 1), raise or lower the skid plate (Item 2) **[Figure 16]** until parallel with the ground.

Installation With Tractor (Cont'd)

Hydraulic Quick Coupler Installation

⚠ WARNING

AVOID BURNS

Hydraulic fluid, fluid tubes, fittings and quick couplers can get hot when running the machine and attachments Be careful when connecting and disconnecting quick couplers.

IMPORTANT

- **Thoroughly clean the quick coupler before making connections. Dirt can damage the system.**
- **Contain and dispose of any oil leakage. See local, state and federal regulations for the correct disposal.**

⚠ WARNING

AVOID INJURY OR DEATH

Hydraulic fluid under pressure can penetrate skin or eyes, causing serious injury or death. Fluid leaks under pressure may not be visible. Wear safety glasses and use a piece of cardboard to find leaks. Do not use your hands. if fluid enters the skin or eyes, get immediate medical attention from a physician familiar with this injury.

Note: Refer to your machine's Operation Manual for proper hydraulic quick coupler installation on your machine.

Figure 17

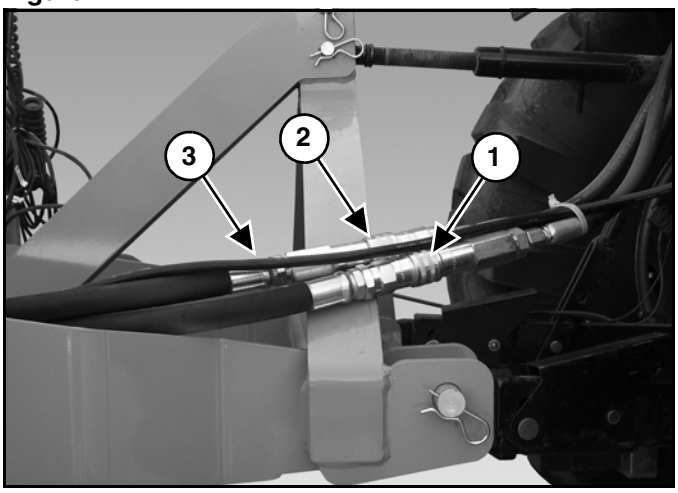

Connect the dual dozer hydraulic hose equipped with the female quick coupler (Item 1) **[Figure 17]** to the machine.

Connect the dual dozer hydraulic hose equipped with the male quick coupler (Item 2) **[Figure 17]** to the machine.

Note: Make sure the quick couplers are fully engaged. If the quick couplers do not fully engage, check to see that the couplers are the same size and type.

Electrical Harness Installation

Connect the dual dozer electrical harness (Item 3) **[Figure 17]** to the harness connected to the machine's battery compartment.

OPERATION

Dual Dozer Operation

Install the Dual Dozer to the machine. See “Installing The Dual Dozer” on page 19. or See “Installing The Dual Dozer” on page 22.

Operating The Dual Dozer (Without Laser)

Enter the machine.

Fasten seat belt, start the engine, and release the parking brake.

While moving forward / backward, position the dozer cutting blade for desired grade.

Operating The Dual Dozer (With Laser)

⚠ WARNING

LASER RADIATION

Avoid direct eye exposure. CLASS 3A / 3R Laser Product.

Enter the machine.

Fasten seat belt, start the engine, and release the parking brake.

Note: The following picture shows a skid-steer loader but the procedure is same for the other approved machine’s.

Figure 18

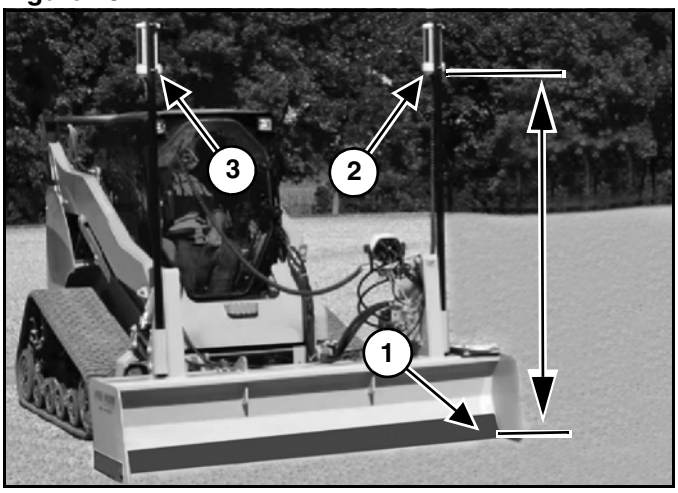

Make sure the dozer blade is level and measure from the bottom of the cutting edge (Item 1) up to the laser receiver (Item 2) **[Figure 18]**. Adjust the laser receiver to desired height.

Repeat procedure on the opposite side and adjust laser receiver (Item 3) **[Figure 18]** to the same height.

Note: Laser receivers must be located above the cab and must be the set at the same height.

Laser receiver(s) measurements can be marked on the receiver masts with a white permanent marker for future references.

Lower the cutting blade(s) on grade.

Dual Dozer Operation (Cont'd)

Operating The Dual Dozer (With Laser) (Cont'd)

Figure 19

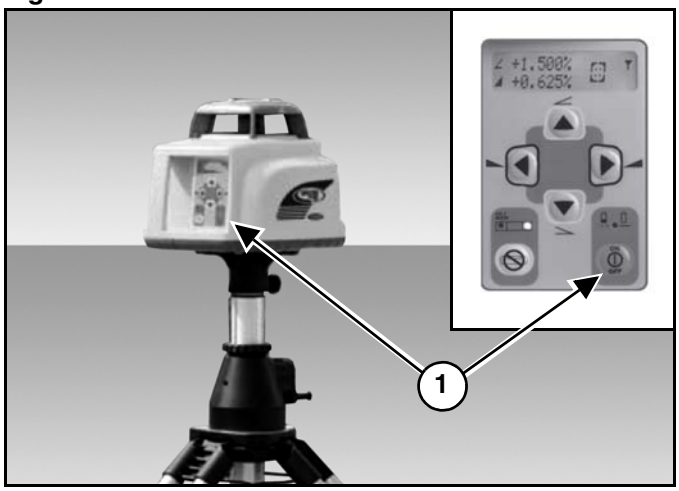

Position the laser horizontally (tripod mount and rubber feet downward!) on a stable platform, at the desired elevation.

Press the power button (Item 1) **[Figure 19]** to turn on the laser.

Note: The laser always powers up in the automatic self-leveling mode with 600 RPM and the last-entered grade. (See the Laser Beacon Manual and Operator's Manual for more information on setup and operation of your laser beacon.)

Note: Laser Receiver and Laser Beacon must be located above the machine's cab.

⚠ WARNING

AVOID EYE INJURY

Never look directly into the laser beam. Set the laser at a height that prevents the beam from shining directly into bystanders eyes.

General Construction (Flat Grade)

Figure 20

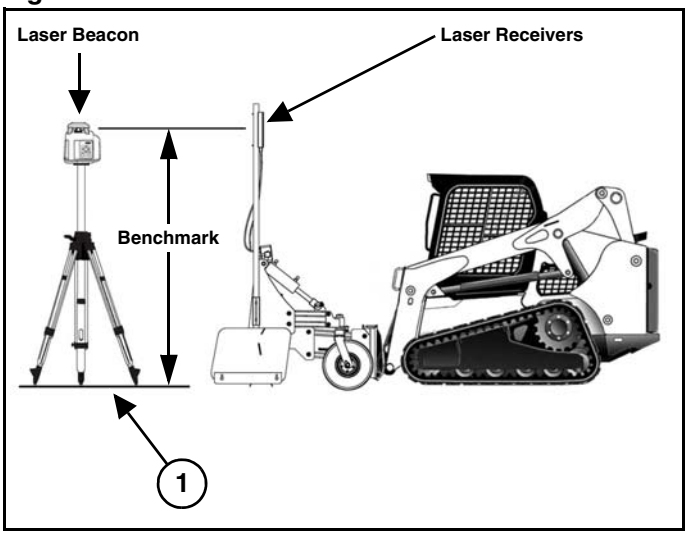

1. Place the laser beacon and tripod on an area that is close to finish grade (Item 1) **[Figure 20]**.
2. Level the tripod.
3. Raise the laser beacon above the loader cab and secure in position.
4. Make several test passes and check the grade.

Figure 21

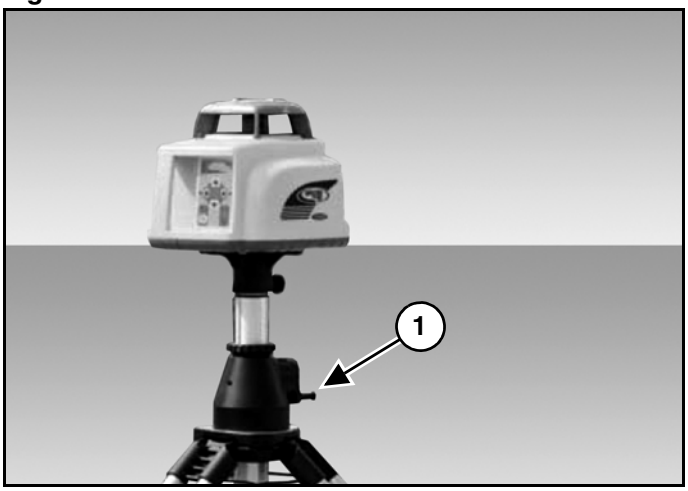

Note: If grade is too high or too low, adjust the laser beacon down or up with the crank (Item 1) [Figure 21].

Dual Dozer Operation (Cont'd)

Job Site Recommendations

Rough doze the job-site without the laser.

The dual dozer will fill in low spots and carry material to get the surface close to grade (This will require less material to be moved when using the laser).

Travel at a slow speed when laser dozing.

Throttle should be set at 1/2 speed.

Figure 22

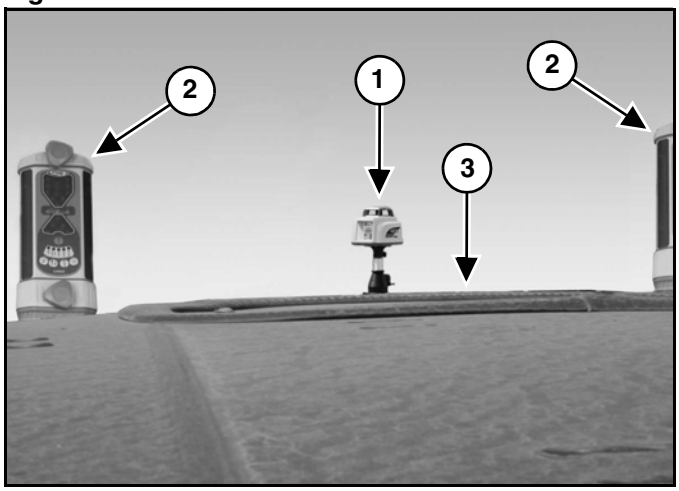

Position laser beacon (Item 1) and receivers (Item 2) above the machine cab (Item 3) **[Figure 22]**.

Note: This will allow the operator to flat doze / grade in any direction.

Turn laser to manual when turning around.

Enter the machine.

Fasten seat belt, start the engine, and release the parking brake.

The dual dozer is ready to operate.

Note: Excessive weight transfer from skidsteer to dozer will damage caster wheels. Caster wheels will only support the weight of the dozer itself.

Figure 23

Figure 24

Figure 25

Dual Dozer Operation (Cont'd)

Job Site Recommendations (Cont'd)

GENERAL CONSTRUCTION

(Operate the dual dozer and machine in any direction on flat surfaces.)

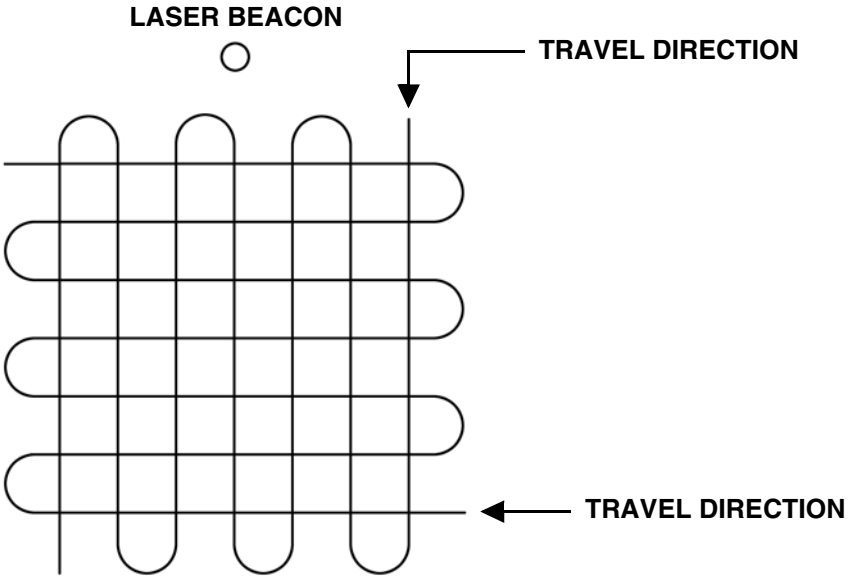

SLOPE CONSTRUCTION

(Operate the dual dozer and machine with the slope.)

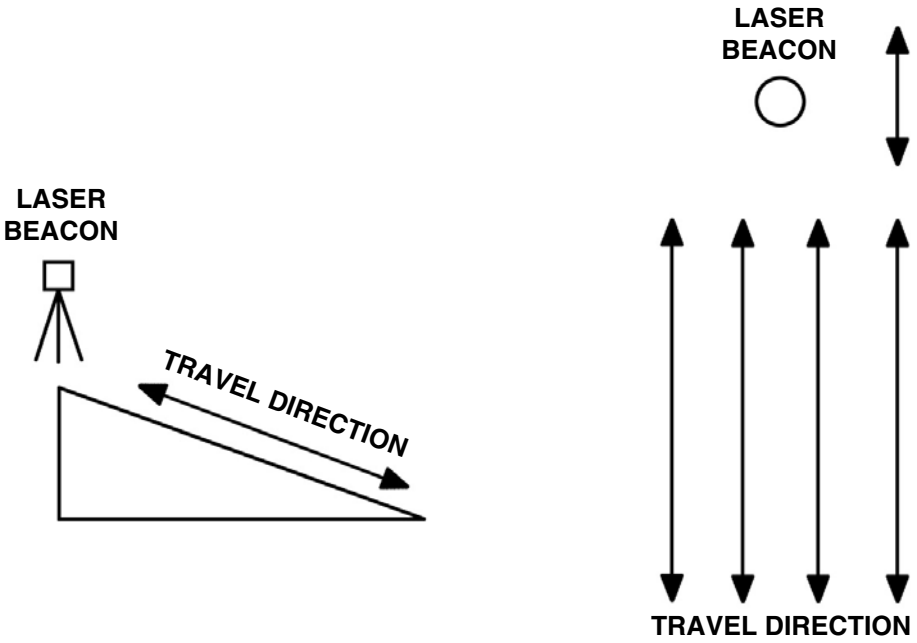

MAINTENANCE

Maintenance Safety

⚠ WARNING

AVOID INJURY OR DEATH

Never operate the machine in a closed building. Proper ventilation is required when operating the machine under all circumstances.

- Always keep the work area clean and dry.
- Always use personal protection devices such as eye, hand and hearing protection when performing any service or maintenance.
- A fire extinguisher and first aid kit should be readily accessible while performing maintenance on this machine.
- Before working or doing maintenance on the Dual Dozer, apply the parking brake, shut off the engine and remove the key or remove the Dual Dozer from the machine.
- Never work under machine or equipment unless the machine or equipment is blocked or supported securely.
- Never operate the machine in a closed building. Proper ventilation is required under all circumstances.
- Disconnect the battery (both terminals) before welding on any part of the machine. Failure to do so may cause damage to electrical components.
- When working around batteries, remember that all of the exposed metal parts are “live”. Never lay a metal object across the terminals because a spark, short circuit, explosion or personal injury may result.
- Battery posts, terminals and related accessories contain lead and lead compounds. **Wash hands after handling**.
- When replacement parts are necessary, genuine factory replacement parts must be used to restore your equipment to original specifications. HitchDoc will not be responsible for injuries or damage caused by use of unapproved parts and / or accessories.
- When completing service or maintenance on this machine, make sure all shields and guards are installed before placing the machine into service.

General Maintenance

To ensure efficient operation, inspect, lubricate and make necessary adjustments and repairs at regular intervals. Keep good maintenance records and adequately clean your machine after each use.

Proper maintenance is important. Follow all maintenance instructions and schedules included in this section.

Inspect the following:

- All components and hardware to ensure equipment is secure and thoroughly tightened.
- Dual Dozer mounting frame and all welds on the Dual Dozer for cracks or damage.
- Visually check the hydraulic hoses and quick couplers for corroding, cracking, damage or excessive wear.
- Machine’s decals for damage.

Note: Repair or replace any damaged parts.

Maintenance Items

Lubricating The Dual Dozer

Note: Thoroughly wash, clean and dry the Dual Dozer before servicing or inspection of Dual Dozer components.

⚠ WARNING

AVOID INJURY OR DEATH

Stop the engine and disconnect the auxiliary hydraulic hose quick couplers before performing maintenance on the Dual Dozer.

⚠ WARNING

AVOID INJURY OR DEATH

Wear safety glasses to prevent eye injury when any of the following conditions exist:

- **When fluids are under pressure.**
- **Flying debris or loose material is present.**
- **Engine is running.**
- **Tools are being used.**

Lubricating The Dual Dozer

Figure 26

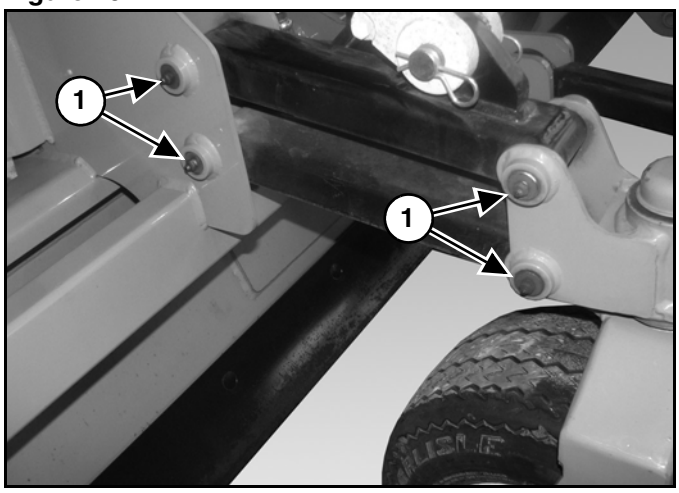

Lubricate the four grease fittings (Item 1) **[Figure 26]** (both sides) every eight hours of operation.

Figure 27

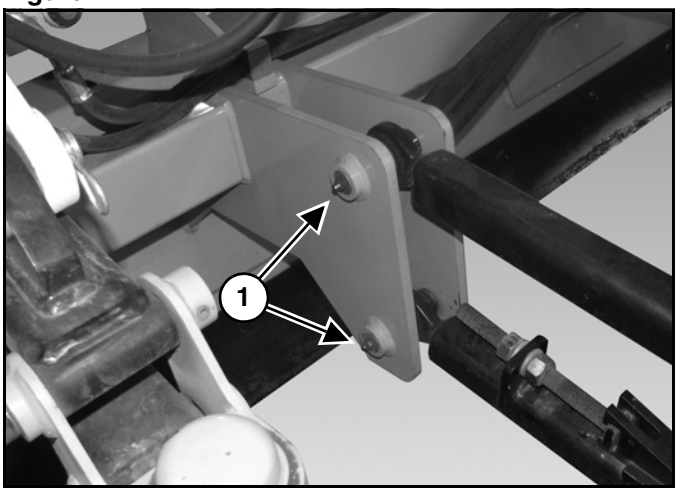

Lubricate the two grease fittings (Item 1) **[Figure 27]** (both sides) every eight hours of operation.

Figure 28

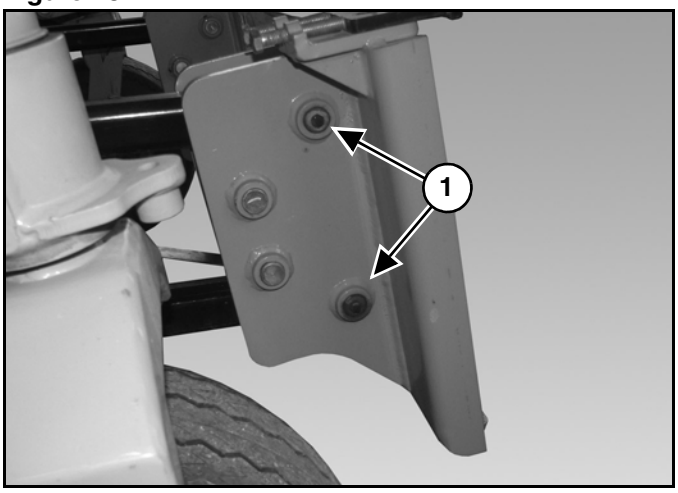

Lubricate the two grease fittings (Item 1) **[Figure 28]** (both sides) every eight hours of operation.

Removal And Installation

Blade Removal

Figure 29

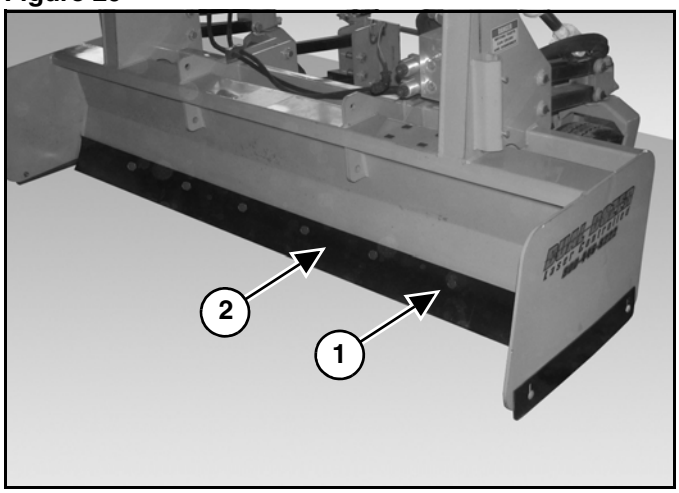

Remove the bolts and nuts (Item 1) from the front blade (Item 2) **[Figure 29]** and remove and replace the front blade.

Figure 30

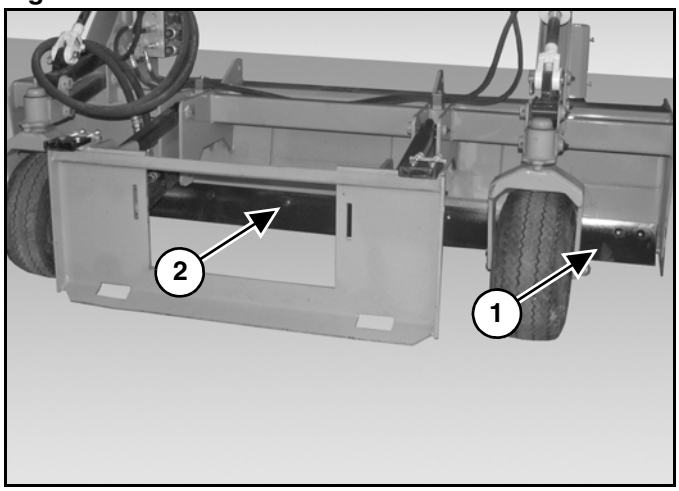

Remove the bolts and nuts (Item 1) from the rear blade (Item 2) **[Figure 30]** and remove and replace the rear blade.

Skid Plate Removal

Figure 31

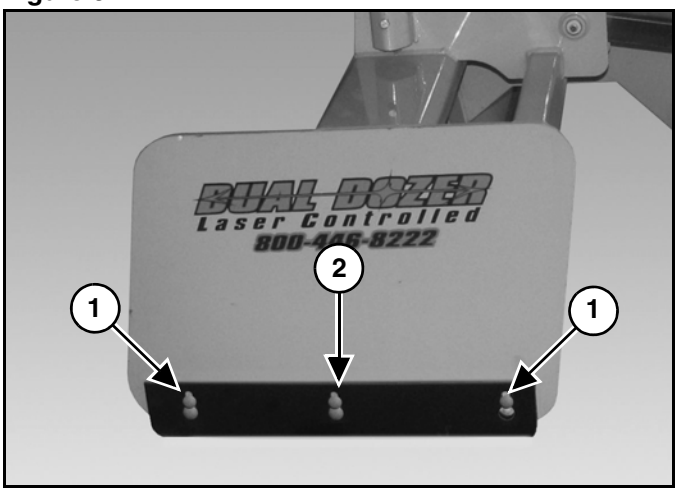

Remove the bolts (Item 1) and nuts, remove the skid plate (Item 2) **[Figure 31]**.

Storage And Return To Service

Storage

After the seasons use or when the Dual Dozer will not be in use for a period of time, thoroughly wash the Dual Dozer. Make sure all components are clean and free of debris or material. Make sure the Dual Dozer is thoroughly dry.

- Inspect all components and hardware to ensure everything is secure and thoroughly tightened.
- Inspect the frame and all welds for cracks or damage.
- Lubricate the grease fittings.
- Inspect decals for damage.
- Inspect optional equipment (if equipped).
- Place the Dual Dozer in a dry protected shelter.

Note: Replace or repair any damaged parts, components, decals or reflectors.

Return to Service

After the Dual Dozer has been in storage, it is necessary to follow a list of items to return the Dual Dozer to service.

- Inspect decals for damage.
- Inspect optional equipment (if equipped).
- Operate the machine and check for proper operation.

SPECIFICATIONS

Dimensions

Dual Dozer

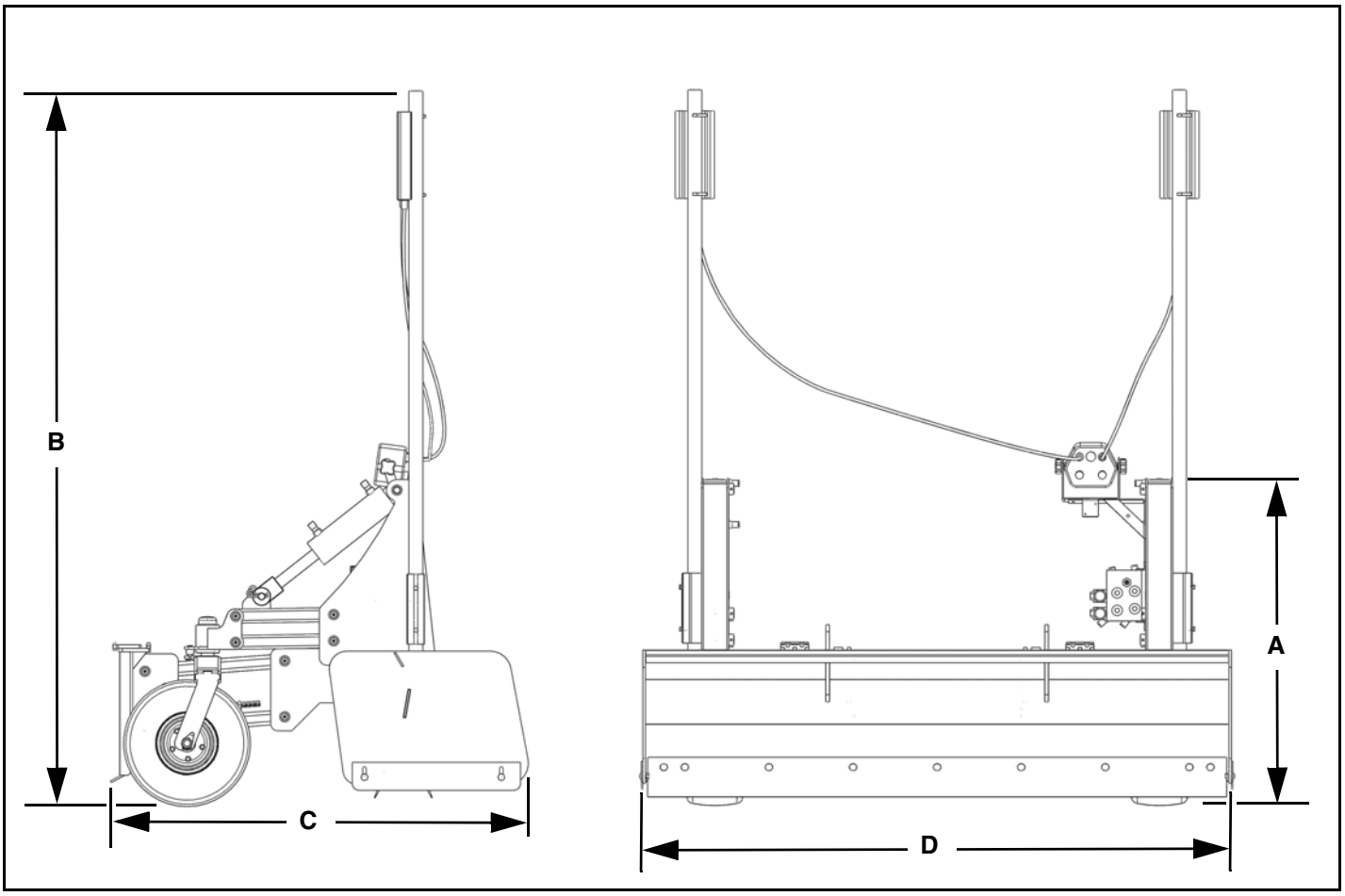

DESCRIPTION	DUAL DOZER		
	6 FT	7 FT	8 FT
Height (A)	46 in	46 in	46 in
Height W / Receiver Mast (B)	102 in	102 in	102 in
Length (C)	58.5 in	58.5 in	58.5 in
Width (D)	72 in	84 in	96 in
Weight	1500 lb	1600 lb	1700 lb
Grader Box Capacity	Front - 14.5 cu-ft	Front - 17 cu-ft	Front - 19.5 cu-ft
	Rear - 8.5 cu-ft	Rear - 10 cu-ft	Rear - 11.5 cu-ft
Horsepower Required	30 - 50 HP	45 - 70 HP	90 HP & Over

Torque Chart

Hydraulic Fitting Torque Data

37° and 45° (Machined or Flared)

Dash Size	Nominal Tube Size	Thread Size	Torque - Steel FT-LB (N•m)	Torque - Brass FT-LB (N•m)
4	1/4	1/16-20	10-11 (13-15)	5-6 (6-3/4-9)
5	5/16	1/2-20	13-15 (18-20)	7-9 (10-13)
6	3/8	9/16-18	17-19 (23-26)	12-15 (17-20)
8	1/2	3/4-16	34-38 (47-52)	20-24 (27-2/3-33)
10	5/8	7/8-14	50-56 (69-76)	34-40 (46-1/3-55)
12	3/4	1-1/16-12	70-78 (96-106	53-60 (72-1/3-82)
16	1	1-5/16-12	94-104 (127-141)	74-82 (100-1/2-111)
20	1-1/4	1-5/8-12	124-138 (169-188)	75-83 (101-1/2-113)
24	1-1/2	1-7/8-12	156-173 (212-235)	79-87 (9-9)
32	2	2-1/2-12	219-243 (296-329)	158-175 (17-3/4-19)

SAE “O” Ring Boss (Steel)

Dash Size	Nominal Tube Size	Thread Size	Torque - Steel FT-LB (N•m)
3	3/16	3/8-24	8-10 (11-13)
4	1/4	7/16-20	14-16 (20-22)
5	5/16	1/2-20	18-20 (24-27)
6	3/8	9/16-18	24-26 (33-35)
8	1/2	3/4-16	50-60 (68-78)
10	5/8	7/8-14	72-80 (98-110)
12	3/4	1-1/16-12	125-135 (170-183)
14	7/8	1-3/16-12	160-180 (215-245)
16	1	1-5/16-12	200-220 (270-300)
20	1-1/4	1-5/8-12	210-280 (285-380)
24	1-1/2	1-7/8-12	270-360 (370-490)

Torque Chart (Cont'd)

English Bolt Torque Data

Property Class and Head Markings	1 or 2b No Mark	5 5.1 5.2 	8 8.2 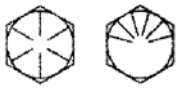
Property Class and Nut Markings	2 No Mark	5 	8

English Bolt and Cap Screw (Lubricated)

Size	Grade 1 FT-LB (N•m)	Grade 2 FT-LB (N•m)	Grade 5, 5.1, 5.2 FT-LB (N•m)	Grade 8 or 8.2 FT-LB (N•m)
1/4	2.8 (3.7)	4.5 (6)	7 (9.5)	10 (13.5)
5/16	5.5 (7.7)	9 (12)	15 (20)	21 (28)
3/8	10 (14)	16 (22)	26 (35)	36 (50)
7/16	16 (22)	26 (35)	41 (55)	58 (80)
1/2	25 (33)	39 (53)	63 (85)	90 (120)
9/16	36 (48)	56 (75)	90 (125)	130 (175)
5/8	50 (67)	78 (105)	125 (170)	160 (215)
3/4	87 (120)	140 (190)	225 (300)	310 (425)
7/8	140 (190)	140 (190)	360 (490)	500 (700)
1	210 (290)	210 (290)	540 (725)	750 (1050)
1-1/8	300 (470)	300 (470)	675 (900)	1075 (1450)
1-1/4	425 (570)	425 (570)	950 (1300)	1500 (2050)
1-3/8	550 (750)	550 (750)	1250 (1700)	2000 (2700)
1-1/2	725 (1000)	725 (990)	1650 (2250)	2650 (3600)

Torque Chart (Cont'd)

English Bolt Torque Data (Cont'd)

Property Class and Head Markings	1 or 2b No Mark	5 5.1 5.2 	8 8.2 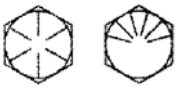
Property Class and Nut Markings	2 No Mark	5 	8

English Bolt and Cap Screw (Dry)

Size	Grade 1 FT-LB (N•m)	Grade 2 FT-LB (N•m)	Grade 5, 5.1, 5.2 FT-LB (N•m)	Grade 8 or 8.2 FT-LB (N•m)
1/4	3.5 (4.7)	5.5 (7.5)	9 (12)	12.5 (17)
5/16	7 (10)	11 (15)	18 (25)	26 (35)
3/8	13 (17)	20 (27)	33 (44)	46 (63)
7/16	20 (28)	32 (44)	52 (70)	75 (100)
1/2	31 (42)	50 (67)	80 (110)	115 (150)
9/16	45 (60)	70 (95)	115 (155)	160 (225)
5/8	62 (85)	100 (135)	160 (215)	225 (300)
3/4	110 (150)	175 (240)	280 (375)	400 (550)
7/8	175 (240)	175 (240)	450 (625)	650 (875)
1	270 (360)	270 (360)	675 (925)	975 (1300)
1-1/8	375 (510)	375 (510)	850 (1150)	1350 (1850)
1-1/4	530 (725)	530 (725)	1200 (1650)	1950 (2600)
1-3/8	700 (950)	700 (950)	1550 (2150)	2550 (3400)
1-1/2	925 (1250)	930 (1250)	2100 (2850)	3350 (4550)

Torque Chart (Cont'd)

Metric Bolt Data

Property Class and Head Markings	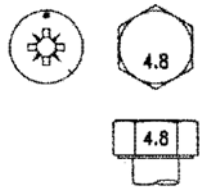	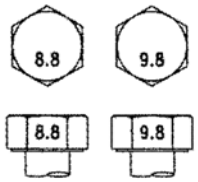	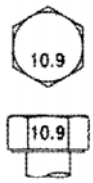	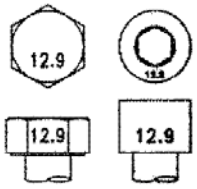
Property Class and Nut Markings	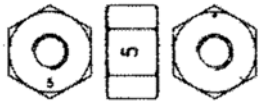	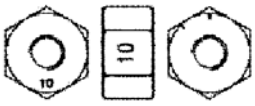	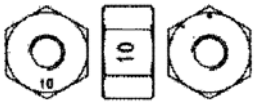	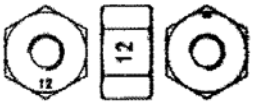

Metric Bolt and Cap Screw (Lubricated)

Size	Class 4.8 FT-LB (N•m)	Class 8.8 or 9.8 FT-LB (N•m)	Class 10.9 FT-LB (N•m)	Class 12.9 FT-LB (N•m)
M6	3.5 (4.8)	6.5 (9)	9.5 (13)	11.5 (15)
M8	8.5 (12)	16 (22)	24 (32)	28 (37)
M10	17 (23)	32 (43)	47 (63)	55 (75)
M12	29 (40)	55 (75)	80 (110)	95 (130)
M14	47 (63)	88 (120)	130 (175)	150 (205)
M16	73 (100)	140 (190)	200 (275)	240 (320)
M18	100 (135)	195 (260)	275 (375)	325 (440)
M20	140 (190)	275 (375)	400 (530)	460 (625)
M22	190 (260)	375 (510)	540 (725)	625 (850)
M24	250 (330)	475 (650)	675 (925)	800 (1075)
M27	360 (490)	700 (950)	1000 (1350)	1150 (1600)
M30	490 (675)	950 (1300)	1350 (1850)	1600 (2150)
M33	675 (900)	1300 (1750)	1850 (2500)	2150 (2900)
M36	850 (1150)	1650 (2250)	2350 (3200)	2750 (3750)

Torque Chart (Cont'd)

Metric Bolt Data (Cont'd)

Property Class and Head Markings	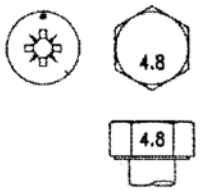	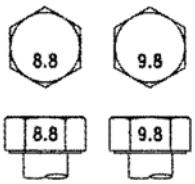	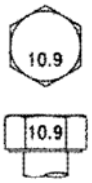	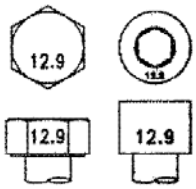
Property Class and Nut Markings	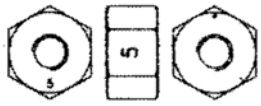	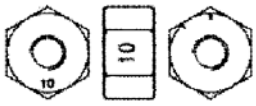	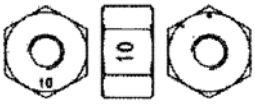	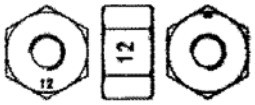

Metric Bolt and Cap Screw (Dry)

Size	Class 4.8 FT-LB (N•m)	Class 8.8 or 9.8 FT-LB (N•m)	Class 10.9 FT-LB (N•m)	Class 12.9 FT-LB (N•m)
M6	4.5 (6)	8.5 (11)	12 (17)	14.5 (19)
M8	11 (15)	20 (28)	30 (40)	35 (47)
M10	21 (29)	40 (55)	60 (80)	70 (85)
M12	37 (50)	70 (95)	105 (140)	120 (165)
M14	60 (80)	110 (150)	165 (225)	190 (260)
M16	92 (125)	175 (240)	225 (350)	300 (400)
M18	125 (175)	250 (330)	350 (475)	410 (560)
M20	180 (240)	350 (475)	500 (675)	580 (800)
M22	250 (330)	475 (650)	675 (925)	800 (1075)
M24	310 (425)	600 (825)	850 (1150)	1000 (1350)
M27	450 (625)	875 (1200)	1250 (1700)	1500 (2000)
M30	625 (850)	1200 (1650)	1700 (2300)	2000 (2700)
M33	850 (1150)	1650 (2200)	2350 (3150)	2750 (3700)
M36	1075 (1450)	2100 (2850)	3000 (4050)	3500 (4750)

PARTS

Parts (Dual Dozer Earlier Models)

Identification	Part Number	Description	Quantity
1	110-012	LOCKWASHER, 7/16”	4
2	110-018	BOLT, 3/8-16 X 1“ Hex	4
3	110-069	NUT, 7/16”	4
4	H3092	CONTROL BOX BRACKET	1
5	H3542	HYD CYLINDER, COMPLETE	2
6	H3007	SPACER BLOCK, HYD. HOSE	2
7	H3019	PIVOT PIN, 1” x 5”	2
8	H3019g	PIVOT PIN, 1” x 5” W / GREASE ZERK	8
9	H3020	ADJ. SKID PLATE	2
10	H3075	PIVOT PIN, 1” x 4 7/8”	4
11	H3075g	PIVOT PIN, 1” x 4 7/8” W / GREASE ZERK	8
12	H3077	WHEEL ASSY, LH	1
13	H3078	WHEEL ASSY, RH	1
14	H3199P	TILT ADJUSTABLE WLDMT	2
15	H3200	WHEEL LINK TOP WLDMT	2
16	H3201P	WHEEL LINK BOTTOM WLDMT	2
17	H3206P	Q-TACH MOUNT WLDMT	1
18	H3207P	Q-TACH LINK WLDMT	2
19	H3208P	Q-TACH PUSH ARM W / WEDGE	2
20	H3210	MAST PIPE	2
21	H3519	ROLL PIN, 5/16””x 1 1/2”	22
22	H3562	BOLT, 7/16” x 1”, CB	4
23	H3570	BLADE, 6 FT	2
	H3569	BLADE, 7 FT	2
	H3568	BLADE, 8 FT	2
24	H3571	BOLT & NUT, 5/8” x 2”, BLADE	18
25	H3601	DOZER WLDMT, 6 FT	1
	H3701	DOZER WLDMT, 7 FT	1
	H3801	DOZER WLDMT, 8 FT	1
26	H-DD-30050079	HYD. MOUNT BOX	1
27	H3577	CONTROL BOX, LASER LEVEL	1
28	H3576	RECEIVER, LASER LEVEL	2
29	H3378	CABLE, CONTROL BOX	2
30	H3209	3 POINT HITCH ASSEMBLY (OPTIONAL)	1
Not Shown	HDD103	SOLENOID CONTROL HARNESS	1
Not Shown	HDD104	MAIN POWER HARNESS	1
Not Shown	HDD105	DOZER POWER HARNESS	1
Not Shown	HDD102	RECEIVER JUCNTION BOX	1
Not Shown	HDD107	REMOTE CONTROL BOX	1
Not Shown	HDD106	REMOTE CONTROL HARNESS	1

Parts (Dual Dozer Earlier Models) (Cont'd)

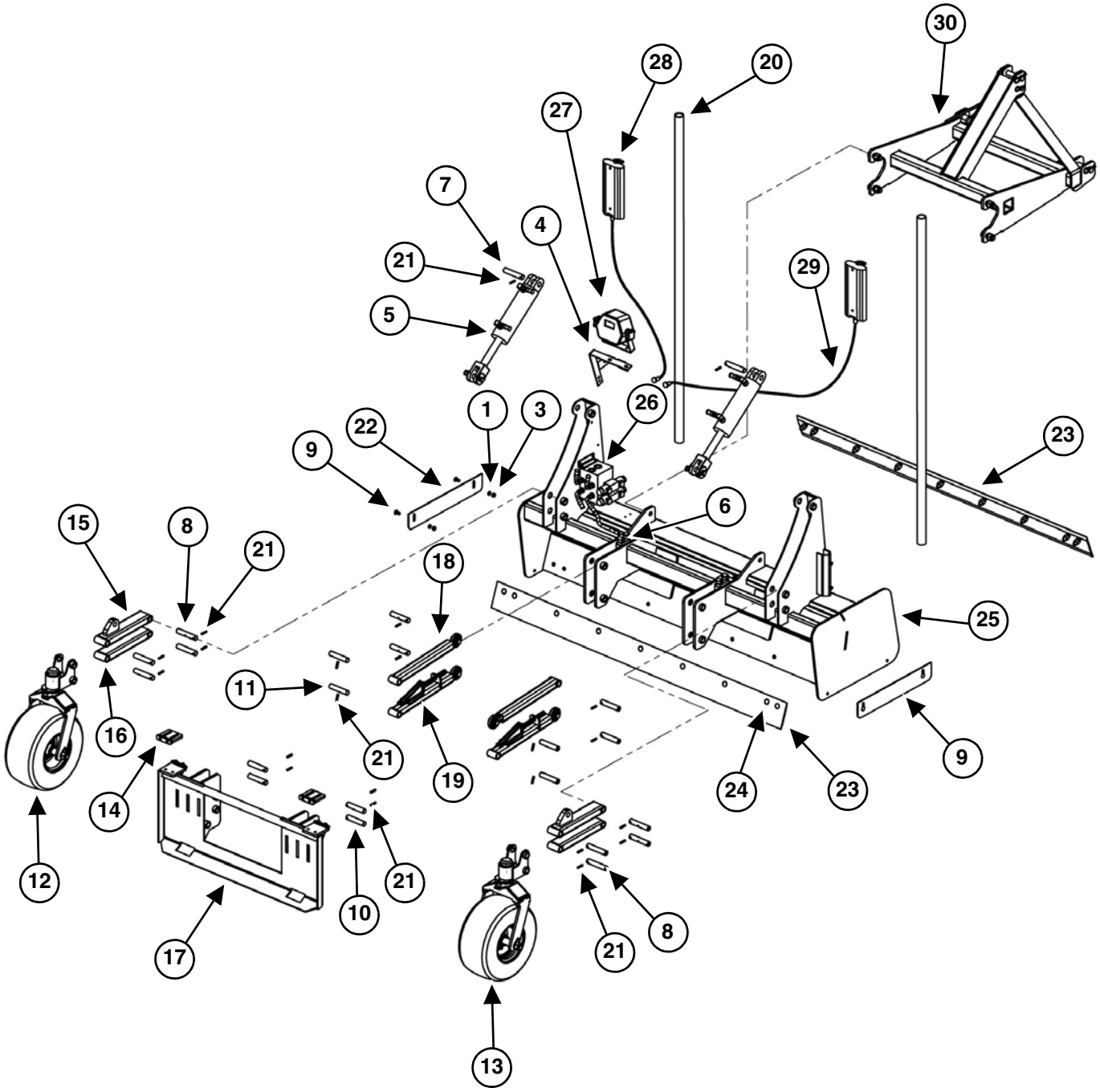

Parts (Dual Dozer Later Models)

Identification	Part Number	Description	Quantity
1	HDD124	PROPORTIONAL VALVE BLOCK KIT	1
2	H3019G	PIVOT PIN, 1” x 5” W / GREASE ZERK	8
3	H3200	WHEEL LINK TOP WLDMT	2
4	H3201	WHEEL LINK BOTT. WLDMT.	2
5	H3565	GREASE ZERK, 1/8-27NPT	8
6	H3209	3 PT. HITCH ASSEMBLY	1
7	H3210	MAST PIPE	2
8	H3019	PIVOT PIN, 1” x 5”	2
9	H3519	ROLL PIN, 5/16 x 1-1/2	10
10	H3542	CYLINDER, 3-1/2” BORE X 8” STROKE	2
11	H3559	DECAL, WARNING: CYLINDER MOVES	2
12	H-SP11040	DECAL, WARNING “STAY CLEAR”	1
13	H3560	DECAL, DANGER MOVING PARTS	2
14	H3020	SKID PLATE ADJUSTMENT	2
15	HDW906	BOLT, 7/16 X 1-1/2 CARRIAGE	6
16	H3566	LOCKWASHER, 7/16”	6
17	H3567	NUT, 7/16-14	6
18	H3570	BLADE, 6 FT	2
	H3569	BLADE, 7 FT	2
	H3568	BLADE, 8 FT	2
19	H3571	BOLT & NUT, 5/8 X 2”, BLADE	16, 18, 20
20	H17003	LOCKWASHER, 1/4”	3
21	HDW168	BOLT, 1/4-20 X 3/4”	3
22	HDD114	COVER, CONTROL, UNIVERSAL	1
23	HDD108	BRACKET, CONTROL, UNIVERSAL	1
24	HDW126	WASHER, FLAT 3/8”	6
25	HDW220	BOLT, 3/8-16 X 1”	10
26	HDW111	NUT, 3/8-16	4
27	HDW397	NUT, 3/8-16 HEX W / SERRATED FLANGE	6
28	H3601	DOZER WLDMT, 6 FT (16 BOLTS)	1
	H3701	DOZER WLDMT, 7 FT (18 BOLTS)	1
	H3801	DOZER WLDMT, 8 FT (20 BOLTS)	1
29	HDW1097	HYD HOSE, 3/4 W / MALE QUICK DISCONNECT	1
30	HDW1096	HYD HOSE, 3/4 W / FEMALE QUICK DISCONNECT	1
31	HDW1098	HYD HOSE, 3/8 X 36”	2
32	HDW1101	BOLT, 5/16-18 X 2”	2
33	HDW1094	HOSE CLAMP PLASTIC BODY	2
34	HDW1095	HOSE CLAMP PLATE	2
35	HDW1099	HYD HOSE, 3/8 X 86”	1
36	HDW1100	HYD HOSE, 3/8 X 80”	1
37	H3508	HAIRPIN COTTER PIN	4
38	HDD111	KIT, SKIDSTEER QUICKTATCH 6 & 7 FT	1
	HDD113	KIT, SKIDSTEER QUICKTATCH 8 FT	1
39	H3228	WHEEL ASSY, RH	1
40	H3227	WHEEL ASSY, LH	1

Parts (Dual Dozer Later Models) (Cont'd)

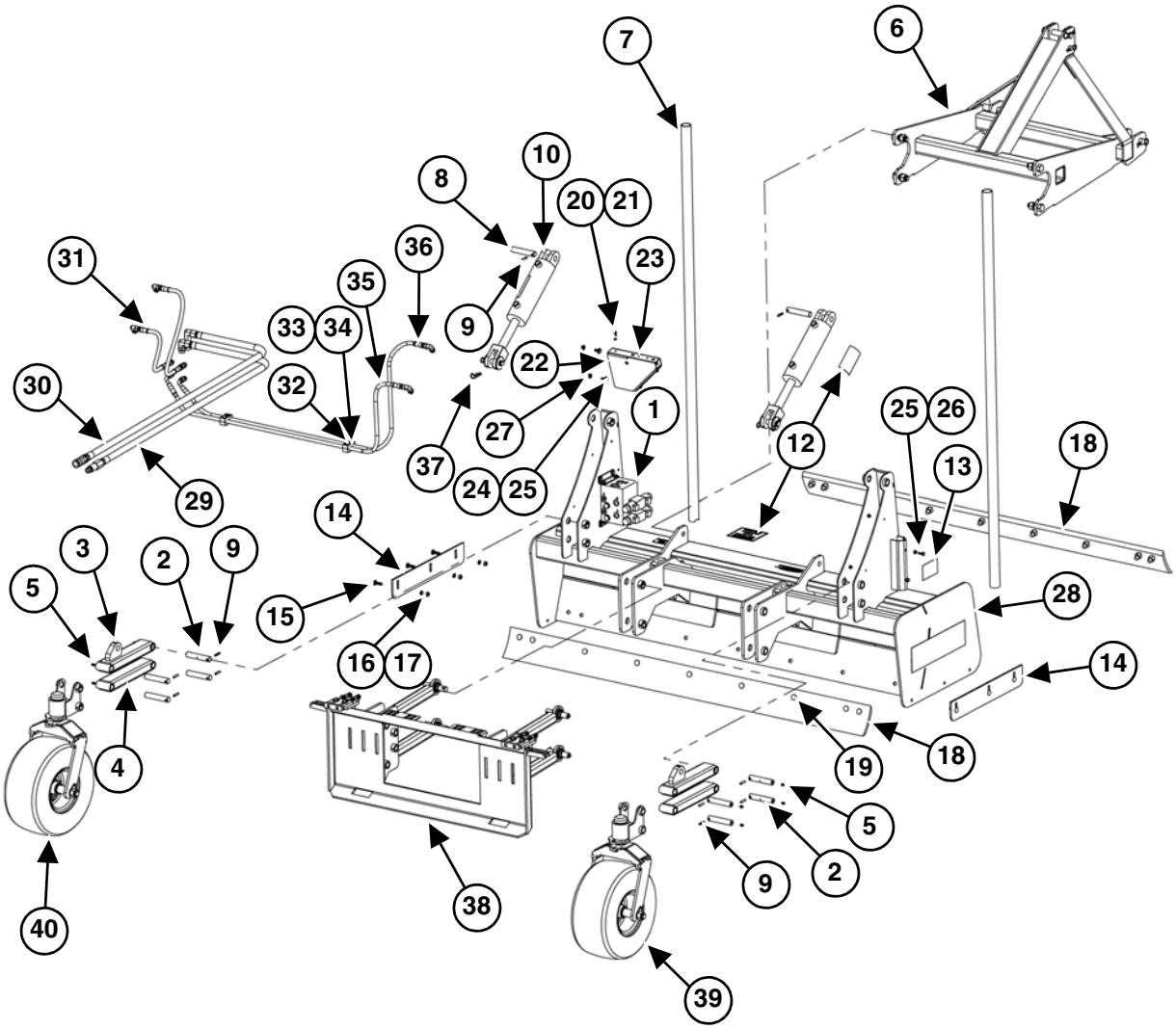

Parts (Wheel Assembly)

Identification	Part Number	Description	Quantity
1	H16002	CLEVIS PIN, 1/2” X 2	1
2	H17003	LOCKWASHER, 1/4”	2
3	H17004	NUT, 1/4-20 HEX	2
4	H17899	HAIRPIN COTTER PIN	1
5	H3112	HUB WASHER / SPACER	1
6	H3113	CASTLE NUT, 1”-14	1
7	H3114	COTTER PIN, 1/8” x 2.5	1
8	H3202	WHEEL HUB WLDMT, LH	1
	H3203	WHEEL HUB WLDMT, RH	1
9	H3226	FORK WLDMT, 11.50”	1
10	H3229	WHEEL SPACER, LONG, 3.90”	1
11	H3230	WHEEL SPACER, SHORT, 3.60”	1
12	H3232	WHEEL AXLE WLDMT, 12.81”	1
13	H3510	BEARING, LARGE	1
14	H3511	BEARING, SMALL	1
15	H3512	OIL SEAL #17443	1
16	H3513	NUT, 1” 14 NYLOCK	1
17	H3514	DUST CAP	1
18	H3523	NUT, 1/2”-20 LUG	5
19	H3524	HUB, 5 BOLT	1
20	H3526	OIL SEAL #12165	2
21	H3527	TIRE & RIM	1
22	H3028P	AXLE TAB	1
23	HDW148	BOLT, 1/4” -20 X 1	2
24	H3531	RACE FOR H3510 BEARING	1
25	H3534	RACE FOR H3511 BEARING	1
26	NA	WHEEL BRG (PART OF HUB PKG.)	2

Parts (Wheel Assembly) (Cont'd)

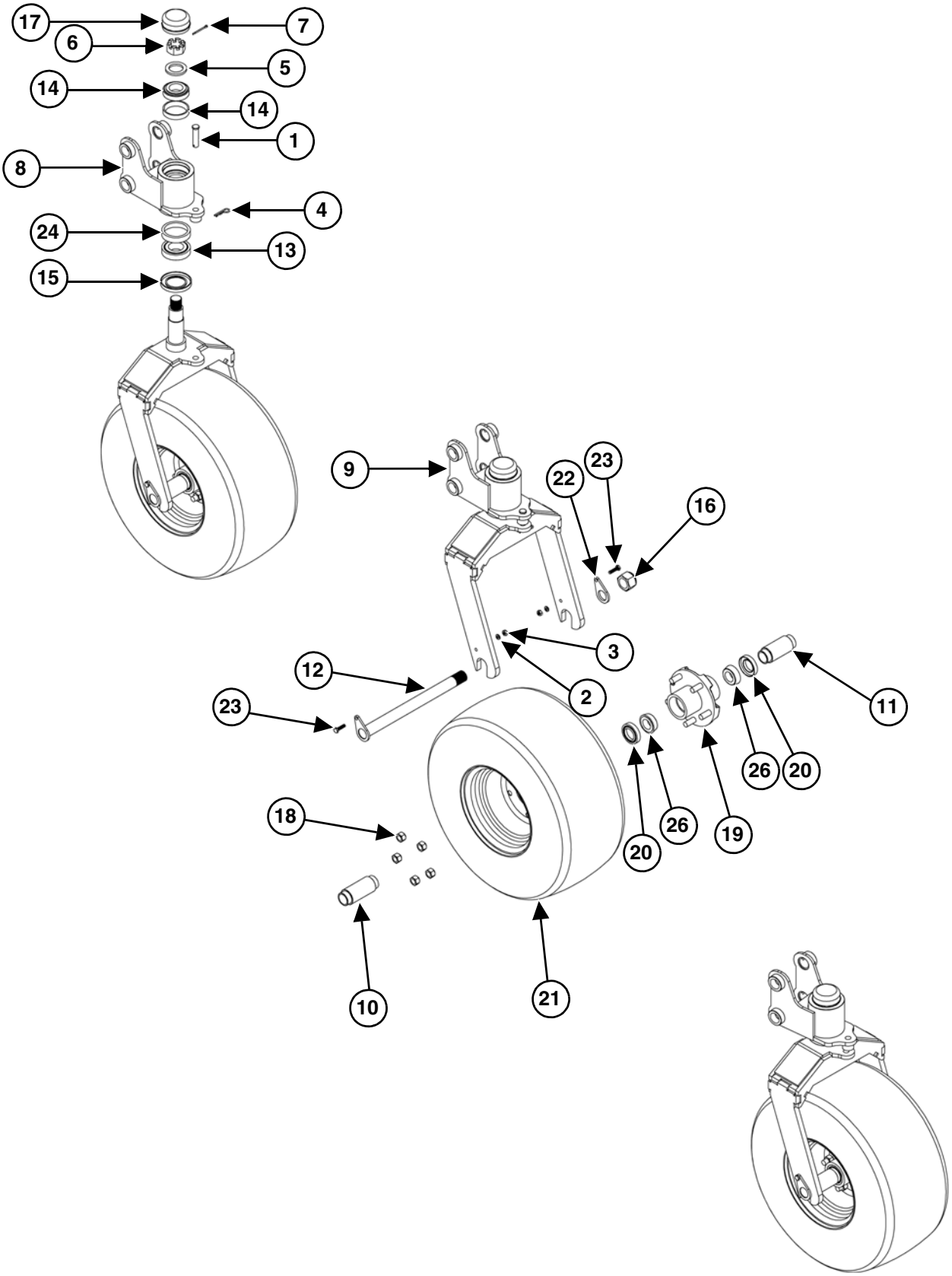

Parts (Quicktach)

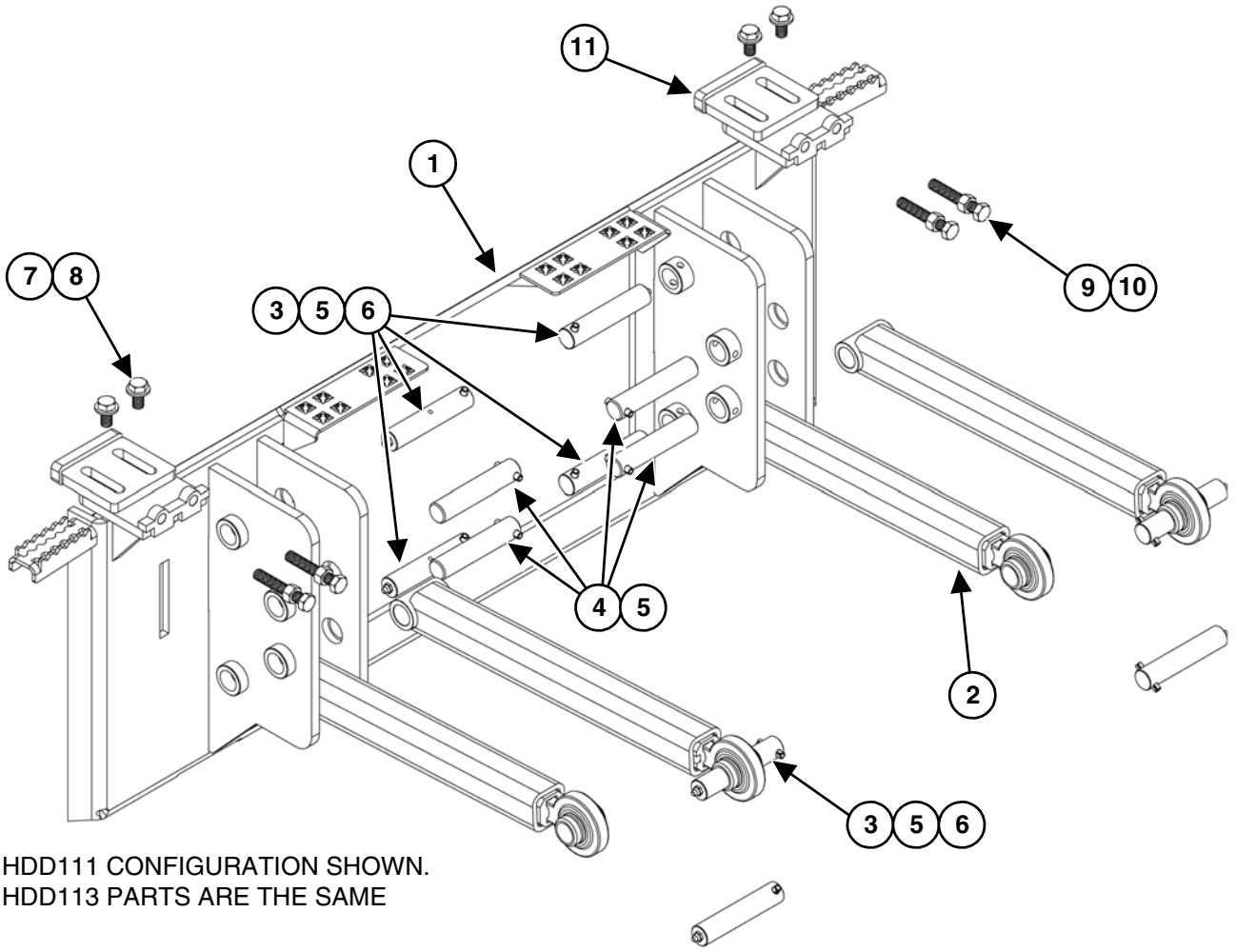

HDD111 CONFIGURATION SHOWN.
HDD113 PARTS ARE THE SAME

Identification	Part Number	Description	Quantity
1	H3206	Q-TACH MOUNT WLDMT 6 & 7 FT	1
	H3213	Q-TACH MOUNT WLDMT 8FT	1
2	H3207	QT LINK WELDMT	4
3	HDW901	PIVOT PIN W / GREASE ZERK	8
4	HDW900	PIVOT PIN	4
5	H3519	ROLL PIN, 5/16 X 1-1/2”	12
6	H3565	GREASE ZERK, 1/8-27 NPT	8
7	HDW221	BOLT, 1/2-13 X 1”	4
8	HDW155	WASHER, FLAT 1/2”	4
9	H3521	BOLT, 1/2-13 X 3 FULLTHRD	4
10	HDW121	NUT, HEX 1/2-13	4
11	H3199	TILT STOPS (ADDITIONAL VERSIONS AVAILABLE)	2

Parts (3 Point Hitch)

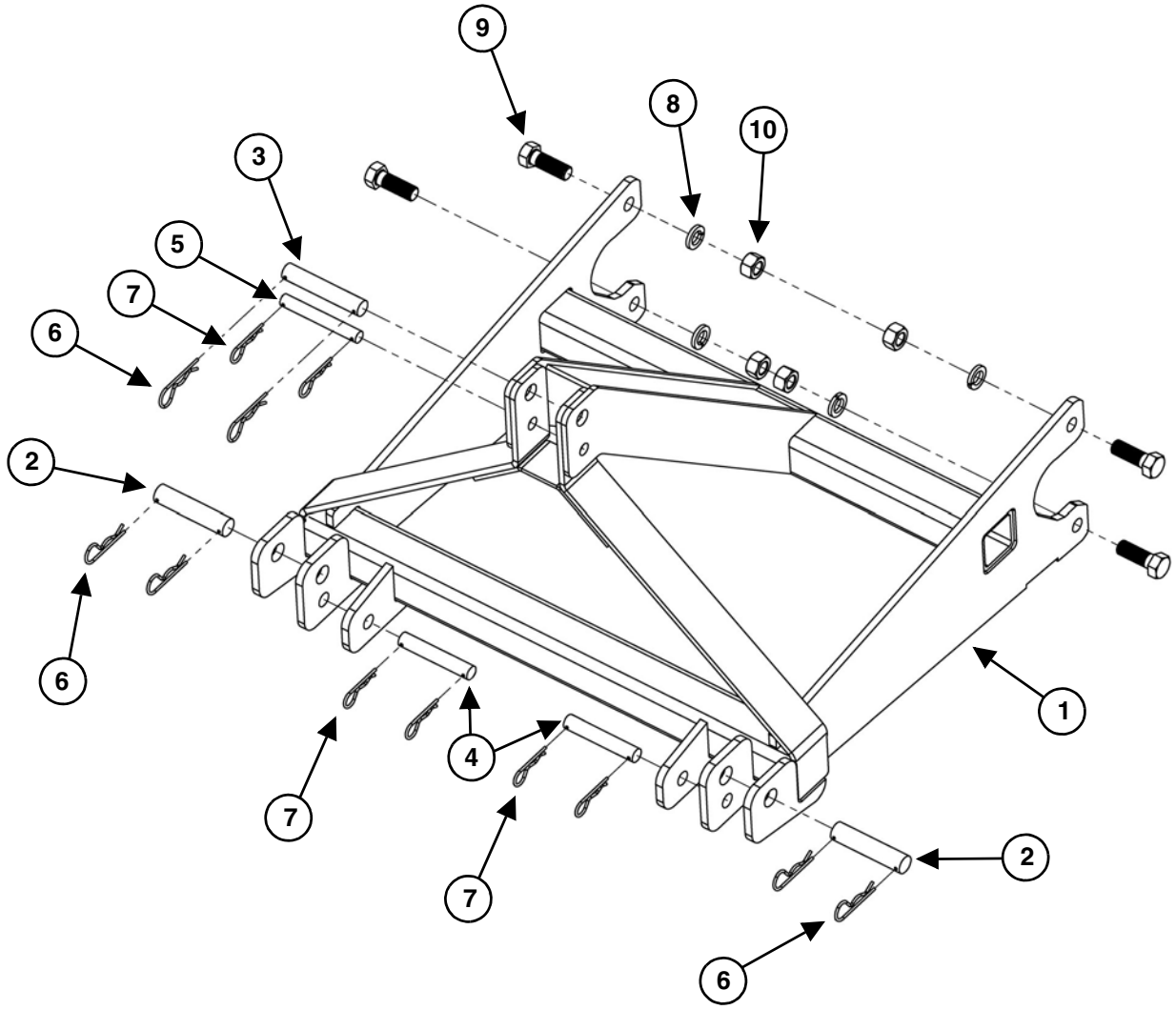

Identification	Part Number	Description	Quantity
1	H3209P	3 POINT WELDMENT	1
2	H3065	PIN, 1 1/8” x 5”	2
3	H3066	PIN, 1” x 5 1/2”	1
4	H3067	PIN, 7/8” x 5”	2
5	H3068	PIN, 3/4” x 5 1/2”	1
6	H3507	HAIR PIN, 11/64”	6
7	H3508	HAIR PIN, 9/64”	6
8	H3501	WASHER, LOCK, 7/8” MED., ZINC	4
9	H3500	BOLT, UNC 7/8” x 2 1/2”	4
10	H3502	NUT, UNC HEX 7/8”	4

WARRANTY

Warranty Policy
HitchDoc Manufacturing Inc.
Dual Dozer

The warranty policy begins upon delivery of the product to the customer.

All warranty claims must be placed with the retailer or dealer at which the product was purchased. If the product was purchased under special circumstances or original dealer is no longer present contact HitchDoc for the nearest dealer at 1-800-446-8222.

HitchDoc warrants to its dealers who in turn warrant to the original owner that the product will be free of defects in material and workmanship for 12 months after delivery by the authorized HitchDoc dealer to the original buyer. All purchased components (example: tires, engines, hydraulic components, electrical components, gearboxes, brakes, axles, etc.) will fall under the manufacturer's warranty

During the warranty period, authorized HitchDoc dealers shall repair or replace, at HitchDoc's option without charge for parts and labor, any part of the product which fails because of workmanship or material defect. The owner shall provide the authorized HitchDoc dealer with prompt notice of the defect and allow reasonable time for replacement or repair. HitchDoc at its option may require failed parts to be returned to the factory.

This warranty does not cover replacement of scheduled service items and high wear items. The owner shall rely solely on the warranty, if any, of the respective manufactures of given parts. This warranty does not cover damages resulting from abuse, accidents, alterations, or use the product is not approved for. Failure to properly maintain and care for the product as outlined in the owner's manual will void warranty.

Use of this product for means outside of its intended design and use will void all warranties. HitchDoc may request to have descriptions of the events which led to the failure of this product provided to them in writing. HitchDoc reserves the right to contact the owner for further clarification of the events which led to the failure of this product to aid in the warranty claim.

THIS WARRANTY IS EXCLUSIVE TO ALL OTHER WARRANTIES AND CONDITIONS. HITCHDOC DISCLAIMS ALL OTHER WARRANTIES AND CONDITIONS EXPRESSED OR IMPLIED, INCLUDING ANY IMPLIED WARRANTIES OR CONDITIONS OF MERCHANTABILITY OR FITNESS FOR A PARTICUALAR PURPOSE. IN NO EVENT SHALL HITCHDOC OR AUTHORIZED HITCHDOC DEALER BE LIABLE FOR ANY SPECIAL, INCIDENTAL, INDIRECT OR CONSEQUENTIAL DAMAGES, WHATSOEVER, INCLUDING BUT NOT LIMITED TO, LOSS OR INTERRUPTION OF BUSINESS, LOSS OF PROFITS, OR LOSS OF MACHINE USE. THE TOTAL LIABILITY OF HITCHDOC AND THE AUTHORIZED HITCHDOC DEALER WITH RESPECT TO THE PRODUCT AND SERVICES FURNISHED HEREUNDER SHALL NOT EXCEED THE PURCHASE PRICE OF THE PRODUCT UPON WHICH SUCH LIABILITY IS BASED.

Prior approval for any costs related to parts, labor, or travel must be approved by HitchDoc.

The following fees may apply to returned product:
HitchDoc will apply a 20% restocking fee for material returned that is not defective.
A $90 chroming fee will apply to hitches that are damaged from not being properly packaged.
A minimum painting fee of $50 will apply to product that is damaged from not being properly packaged.

DUAL DOZER
Laser Controlled

www.hitchdoc.com

HitchDoc Manufacturing Inc.
131 County Rd • 34 E. • Jackson, MN 56143
Tel: 507.847.4049 • Fax: 507.847.5100 • Toll Free: 1.800.446.8222

Printed in USA
©HitchDoc 2012